100W IP66 TRIAC dimmable constant-voltage LED driver

Phase-cut control for compatible constant-voltage LED lighting

100W	IP66	24V / 48V	TRIAC	PWM
RATED POWER	IP RATING	DC OUTPUT	DIMMING	OUTPUT TYPE

SPECIFICATION

Manufacturer / brand	ATOM LED
Output type	Constant voltage
Rated power	100W
AC input	200-240V AC
Mains frequency	47 - 63Hz
24V version	4.16A
48V version	2.08A
Enclosure	IP66
Minimum load	Approximately 10W
Cooling	Free air convection

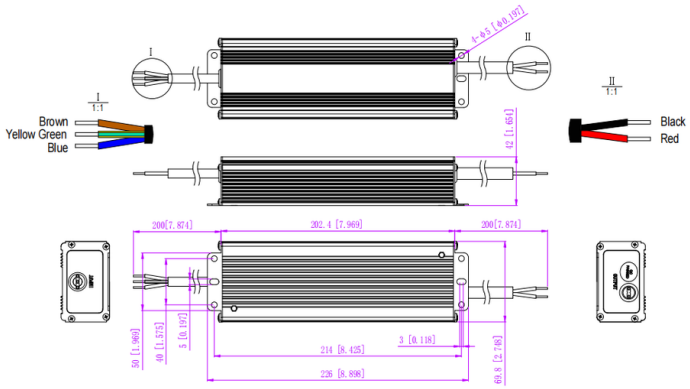

Enclosure drawing • dimensions on page 2

MATCHING THE DRIVER TO THE LED LOAD

Output version	Maximum current	Rated load
24V DC	4.16A	100W
48V DC	2.08A	100W

Choose the same DC voltage as the LED strip. Add the wattages of all connected lengths and allow for the temperature derating on page 4. The driver accepts leading-edge and trailing-edge phase-cut dimmers.

Dimensions, connections and installation

Housing dimensions, mounting clearances and electrical connections

DIMENSIONS

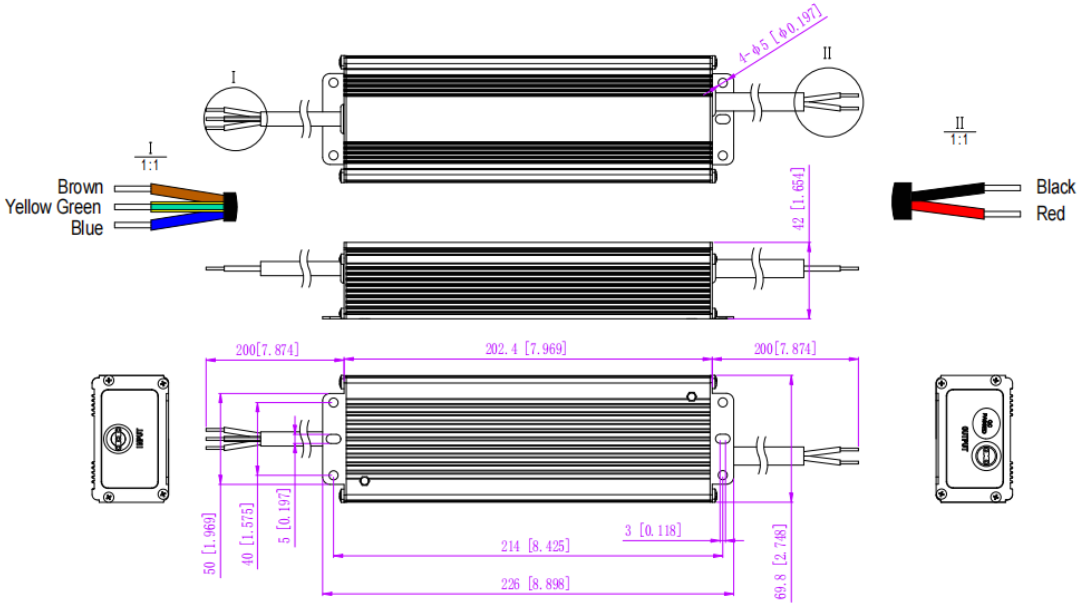

Enclosure (L × W × H)	230 × 70 × 43mm
Net weight	1.05 kg
Location	IP66 enclosure. Protect all cable joints for the installation environment.

CONTROL AND CONNECTIONS

AC supply
200–240V AC

TRIAC LED driver
Phase-cut input

LED strip
Match the DC voltage

Control the driver through its AC phase-cut input. Follow the input and output markings on the supplied unit. Connect protective earth where marked, and observe LED output polarity. The diagram shows the order of components.

Cautions

Before connecting or commissioning the driver

HANDLING AND INSTALLATION

1

Isolate the supply

A qualified person must isolate mains power before handling the connections.

2

Match the voltage

Use the 24V model for 24V lighting, or the 48V model for 48V lighting.

3

Check the load

Add the wattage of every run. The connected load should be at least 10W.

4

Allow ventilation

Leave space around the enclosure for free air circulation. Follow the load curve as ambient temperature rises.

5

Select the dimmer

Use a compatible phase-cut dimmer. The specified dimmer power rating is at least 150W. Check its LED load and inrush limits.

6

Check connections

Check terminal labels, output polarity and cable joints before restoring power.

ELECTRICAL PROTECTION

Short circuit	The output cycles during the fault. Restore power after the fault has been cleared.
Overload	Cyclic protection at up to 120% of rated load. The output recovers after the fault is cleared.
Over-temperature	The output switches off at a case temperature of 100°C ± 10°C and recovers after cooling.

OPERATING ENVIRONMENT

Humidity	20 - 95%RH non-condensing
Storage	-40 - +80°C,10 - 95% RH non-condensing
Temperature	-40 to +60°C (see page 4)

Electrical performance

Input characteristics, output regulation and load derating

ELECTRICAL CHARACTERISTICS

Parameter	24V output	48V output
Voltage tolerance	±0.5V	±0.5V
Line regulation	0.5%	0.5%
Load regulation	1%	1%
Full-load efficiency	84% at 230V AC	85% at 230V AC
Maximum input current	0.8A	0.8A
Typical inrush	60.8A, 376µs at 230V AC	60.8A, 376µs at 230V AC
Leakage	<0.5mA	<0.5mA
Full-load THD	20% at 200V AC at 230V AC at 240V AC	20% at 200V AC at 230V AC at 240V AC
Dielectric withstand	input-output:3.75KV AC input-FG:1.5KV AC output-FG:0.5KV AC	input-output:3.75KV AC input-FG:1.5KV AC output-FG:0.5KV AC
Isolation resistance	input-output:100M / 500VDC / 25°C / 70%RH	input-output:100M / 500VDC / 25°C / 70%RH

LOAD DERATING

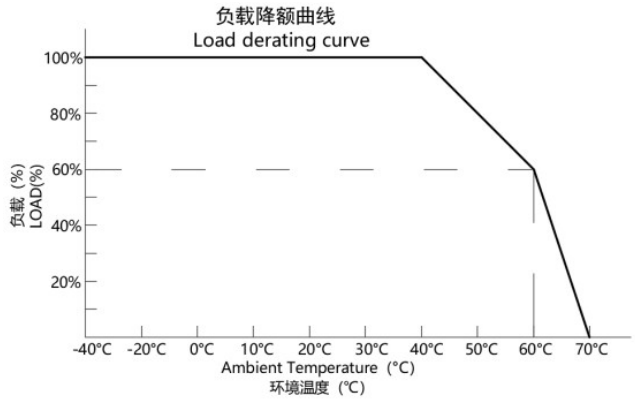

At 40°C ambient temperature the curve permits full rated load. At 60°C the maximum load is 60% of the rating. Allow additional capacity or reduce the connected load as the installation temperature rises.

Unless indicated otherwise, the reference conditions are 230V AC input, rated load and 25°C ambient.