500W IP67 constant-voltage LED power supply

Constant-voltage DC output for compatible LED lighting

500W	IP67	DC	50 / 60 Hz	CV
RATED POWER	IP RATING	OUTPUT	MAINS	SUPPLY TYPE

SPECIFICATION

Manufacturer / brand	ATOM LED
Output type	Constant voltage
Rated output	500W
AC input	175-277Vac
Mains frequency	50/60 Hz
Output versions	12V, 24V, 36V or 48V DC
Protection rating	IP67
Cooling	Free air convection



ATOM LED range photograph. Housing and label vary by rating.

RATED OUTPUT BY VERSION

DC output	Maximum output current	Rated power
12V	Max 41.7A	500W
24V	Max 21A	500W
36V	Max 14A	500W
48V	Max 10.5A	500W

Choose a supply with the same DC output voltage as your LED strip. Add the loads connected to the unit and use the temperature curve on page 4 to check the available output at your installation temperature.

Dimensions, connections and installation

Enclosure dimensions and connections for the supplied unit

DIMENSIONS

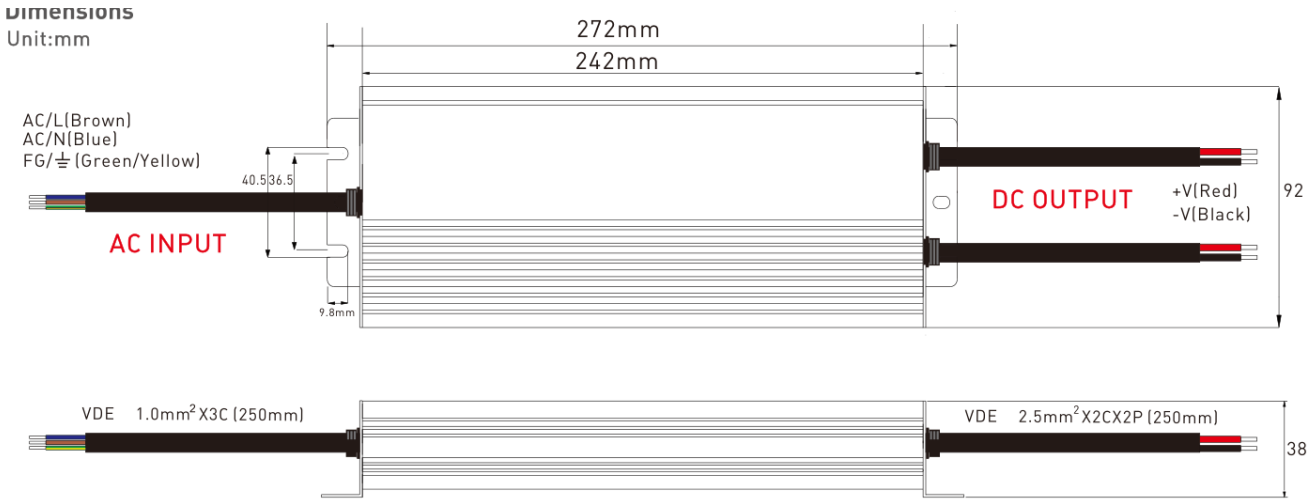

Enclosure (L × W × H)	272 × 92 × 38mm
Mounting	Provide clearance for cable entries and air circulation.
Connections	Identify AC input, protective earth and DC output from the markings on the unit.

SYSTEM CONNECTIONS

AC supply
Fixed mains installation

LED power supply
500W constant voltage

LED load
Match the output voltage

Connect LED loads with the correct polarity. Protect terminations and joints against the installation environment. The IP rating applies to the supply enclosure.

Cautions

Before mounting or connecting the power supply

HANDLING AND INSTALLATION

1

Isolate the supply

A qualified person must isolate the AC supply before working on mains connections.

2

Match the output

Check the DC voltage on the unit against the voltage required by the strip.

3

Size the load

The total connected load must stay within the available output, up to 500W at rated conditions.

4

Allow airflow

Allow air to circulate around the case. Apply temperature derating where needed.

5

Protect cable ends

Use suitable enclosures and glands for exposed connections and terminations.

6

Check polarity

Check the DC positive and negative conductors before switching on.

OPERATING CONDITIONS

Ambient temperature	ta: -30°C ~ 50°C tc: 80°C
Storage	-40°C ~ 80°C, 10~95%RH
Protection	Short circuit, overload, over-temperature and over-voltage.
Cooling	Natural convection

LOAD AND TEMPERATURE

The temperature curve on page 4 shows the maximum load at each ambient temperature. Use the line for the actual AC input voltage. Mount the power supply so that heat can dissipate from the enclosure.

Electrical performance

Electrical specifications and the operating load curve

ELECTRICAL SPECIFICATION BY OUTPUT VOLTAGE

OUTPUT	Output voltage	12VDC	24VDC	36VDC	48VDC
	Output voltage range	12VDC±0.3VDC	24VDC±0.6VDC	36VDC±0.9VDC	48VDC±1.2VDC
	Output current	Max 41.7A	Max 21A	Max 14A	Max 10.5A
	Output power	Max 500W			
	Output power range	0~500W			
	Ripple & Noise	≤250mV	≤250mV	≤250mV	≤250mV
	Linear Regulation	±1%			
	Load Regulation	±1%			
	Start-up Time (Typ)	600ms/230VAC 700ms/175VAC			
	Rise Time(Typ)	50ms/230VAC 50ms/175VAC			
	Hold Up Time(Typ)	14ms/230VAC 13ms/175VAC			
INPUT	Input voltage	175-277Vac			
	Frequency	50Hz			
	Input current	2.28~1.53A			
	Power factor	PF>0.96/230Vac, at full load; PF>0.98/175Vac, at full load;			
	No-load power consumption	< 0.5W			
	THD	≤12% at 230Vac,at full load; ≤10% at 175Vac,at full load			
	Efficiency (typ.)	93%	93.5%	94%	94%
	Inrush current(typ.)	65A/230VAC			
	Control surge capability	L,N:2KV L,N-PE:4KV			
	Leakage current	Max. 0.5mA			
ENVIRONMENT	Working temperature	ta: -30°C ~ 50°C tc: 80°C			
	Working humidity	20 ~ 99%RH, condensing(Waterproof)			
	Storage temp., humidity	-40°C ~ 80°C, 10~95%RH			
	Vibration	10~500Hz, 2G 12min./1cycle, period for 72min. each along X, Y, Z axes.			
PROTECTION	Overtemperature	Protection type: Turn off the output voltage, after the temperature drops, re-energize to restore.			
	Over voltage protection	Shut down the output when output voltage load >110%~150%			
	Over load protection	Shut down the output when current load ≥110%~150%, auto recovers.			
	Short circuit protection	Protection type: It can be automatically restored after the fault is eliminated.			
SAFETY & EMC	Withstand voltage	I/P-O/P: 3750Vac			
	Isolation resistance	I/P-O/P: 100MΩ/500VDC/25°C/70%RH			
	Safety standards	IEC/EN61347;IEC/EN60950;IP67			
	EMC emission	EN55015:2013;FCC Part 15B;EN61547:2009;EN61000-3-2:2014;EN61000-3-3:2013			
	EMC immunity	EN61000-4-2,3,4,5,6,8,11 EN61547			
Reliability and Quality Control	Impact aging	100% of the product is fully loaded and impacted for 4 hours under an environment of at least 40°C ± 5°C			
	Component derating	Under the steady-state conditions of rated input and output, the stress of components will not exceed its maximum nominal value			
NOTE	1. All parameters not specifically mentioned are measured at 230VAC input, rated load and 25°C ambient temperature. 2.Ripple and noise test method: connect 0.1uF and 47uF capacitors in parallel at the terminal, and measure under 20MHZ bandwidth. 3. Ensure that the power supply is used under the rated parameters and environment				

LOAD DERATING

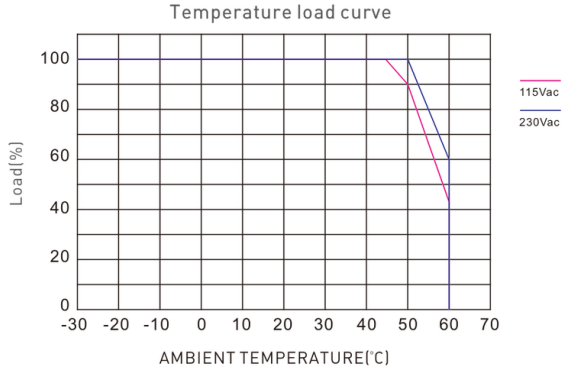

Use the 115V AC or 230V AC curve to select the maximum output load at the installation temperature. Output voltage, current and ripple figures are listed separately for each DC version in the table above.